Final Disposal and Retrievability in the German Repository Concept – 14100

Frank Charlier *, Bruno Thomauske **

* international nuclear safety engineering GmbH, Jesuitenstraße 4, D-52062 Aachen

(charlier@nse-international.com, phone: +49 241 47583380)

** RWTH Aachen University, NET

(thomauske@net.rwth-aachen.de, phone: +49 241 8096520)

ABSTRACT

As a framework for the safety analyses the German Federal Environment Ministry (BMU) set safety requirements. [1] One of the safety requirements is the retrievability of the disposed containers during the operational phase and the feasibility of the containers to be retained over a period of 500 years. Proof of compliance with these requirements was included in the preliminary safety analysis for the Gorleben site (Vorläufige Sicherheitsanalyse Gorleben – (VSG)), performed from 2010 to 2013.

Retrievability of disposed waste-containers (drift and borehole emplacement) from a repository was evaluated as part of the design and optimization of the final repository.

From the present point of view no fundamental concerns and questions remain about the feasibility of the developed concepts for retrieval. For example, to drive the galleries needed for retrieval, the same equipment and techniques used to drive the galleries of the final repository could be applied. The feasibility of the retrieval of POLLUX-containers had already been investigated in a study [2] and validated as practical. Even for the retrieval of waste canisters buried in 300m deep boreholes the new developed concept relied on using existing technologies as far as possible.

It should be noted that before the approvability of the retrieval concepts developed in VSG could be achieved, still distinctive research and development has to be done and clarification in terms of regulatory issues is needed.

INTRODUCTION

Since 1979 the salt dome in Gorleben has been investigated for its suitability as a final repository for heat-generating radioactive wastes in Germany. After an above ground site survey from 1979 to 1983 and a sub-surface survey the exploration of potential disposal areas had been started in 1996 after sinking of shafts.

The German Federal Environment Ministry (BMU) stipulated in 2009 that a preliminary safety analysis should be performed based on results of the site investigations.

The retrieval of waste containers from a final repository was evaluated in the VSG scheme. The retrieval of containers (e.g. POLLUX- or CASTOR) and the retrieval of waste canisters from borehole-storage was considered.

The final repository concepts for the storage-options mentioned above were described in the VSG scheme, as well. These concepts were presented during the WM-conference 2013. [3]

Retrieval from Drift-Storage

Time of Retrieval

According to [2] the final repository will be in operation during the decision process regarding the retrieval. During operation, two points in time can be defined to determine a time frame:

- Earliest time for retrieval: One waste container was stored. Storage drifts, cross-cuts and driftways weren`t backfilled with salt breeze yet.
- Latest time for retrieval: all waste containers were stored according to plan. Storage drifts, cross-cuts and driftways were backfilled and technical barriers were built.

It is believed for all following considerations that the infrastructure, all shafts and all logistic facilities for internal transport underground and above ground are in operational

state at all times. For the conception of the retrieval, the latest time of operation is considered to cover all possible dates between the earliest and the latest time for recovery.

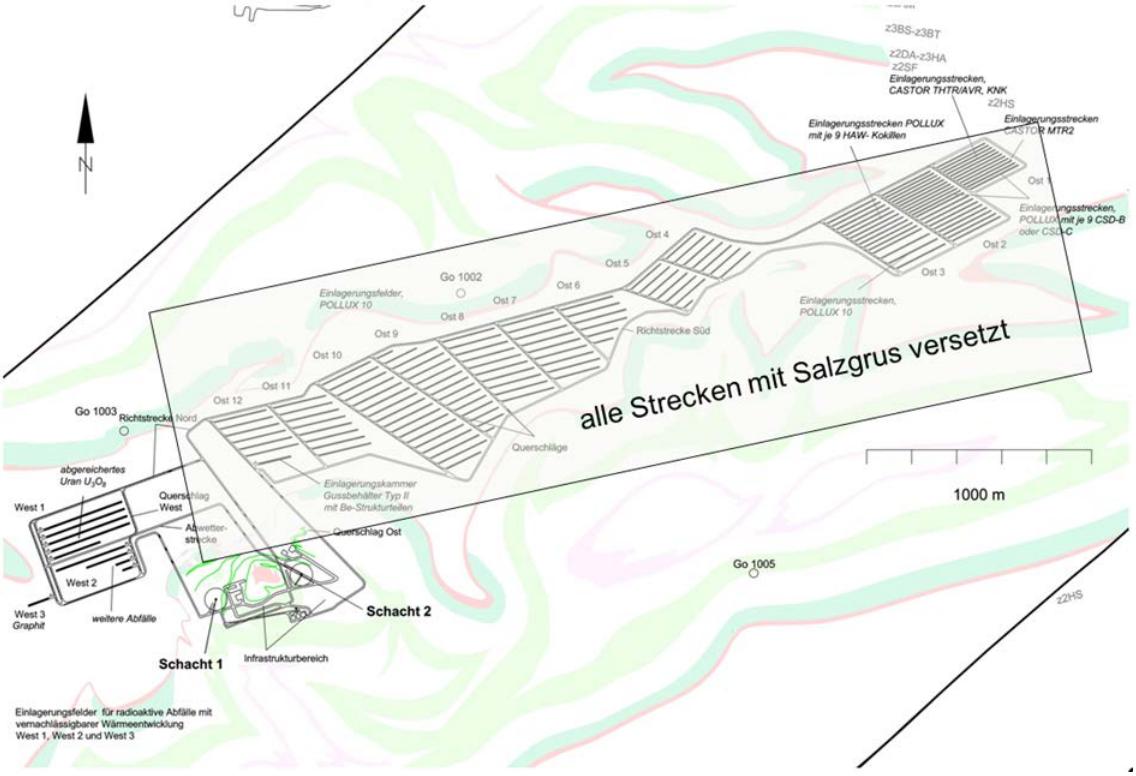

Fig. 1: Areas of the mine to be re-constructed. [3]

<u>Process actions for Retrieval</u>

The conceptual approach concludes the inversion of the storage process to be expedient for a recovery of the storage containers. In addition, the procedures and machinery that were used during storage operations should be applied. The process actions for retrieval can be characterized as follows:

- Re-constructing drifts and cross-cuts
- Constructing connected retrieval-drifts
- Ventilating and cooling of the constructed areas for recovery

- Baring the waste containers
- Pulling the containers to a retrieval-drift
- Transport of the waste containers underground and above ground

Estimation and control of the climate conditions in case of retrieval

Based on the assumption, that temperatures to be expected in the storage areas will not exceed 200°C, computational estimations were conducted for air quantities and air temperatures needed to comply with mining law regulations. [4] Mining law stipulates, that no personnel is allowed to work under climate conditions exceeding temperatures of 52°C in dry and 27°C in humid atmospheres.

To comply with these regulations, the following measures should be applied:

- Coming below the temperature limit of 52°C stipulated by mining law [4] under the given conditions (24m^3 cross section of the drift, rock temperatures of 150°C or 200°C and air velocity of 3m/s) was calculated to be possible if fresh air enters the mine at appropriate temperatures [5].
- The calculation based on the underlying conditions (2 shafts to ground level, diameter of each shaft 7.5m, air velocity in elevator shaft 10m/s) resulted in total air quantities of approximately 26,000 m^3/min, enough to ventilate a maximum of six recovery drifts simultaneously.
- Under these circumstances recovery within 40 years seems possible, concerning the ventilation design.
- Temperature rise of fresh air on its way from the surface through the intake shaft and the drifts to the recovery fields can lead to temperatures exceeding regulatory limits in recovery drifts, if drifts are constructed to quickly and no cooling measures for fresh air are taken.

Time scheduling for construction of the mine and retrieval

Assessing the expected duration of the recovery was performed on a concept level within the VSG. Starting with the data shown in table 1, a time frame of 40 years can be assumed.

Tab. 1: Facts regarding the planning of recovery

Number of Storage Containers	3600	
Number of Disposal Areas	12	
Number of Retrieval Drifts	120	
Total Length of all Retrieval Drifts	36.000	m
Length of all connected cross-cuts	6.000	m
Length of all Driftways	11.000	m
Construction-Speed in Driftways	10	m/day
Construction-Speed in cross-cuts	3	m/day
Construction-Speed in Retrieval Drifts	2	m/day
Workdays per Year	250	

Retrieval from Borehole-Storage

The retrieval of waste-containers from borehole-storage was evaluated on a conceptual level. In a first step, the preliminary concepts for storage were modified.

It was necessary within the concept to equip the boreholes with a tubing, to allow the retrieval of the containers. The pressure applied by the surrounding rocks on the tubing was considered (Fig. 2). In the second step, a retrievable canister was drafted (Fig. 3).

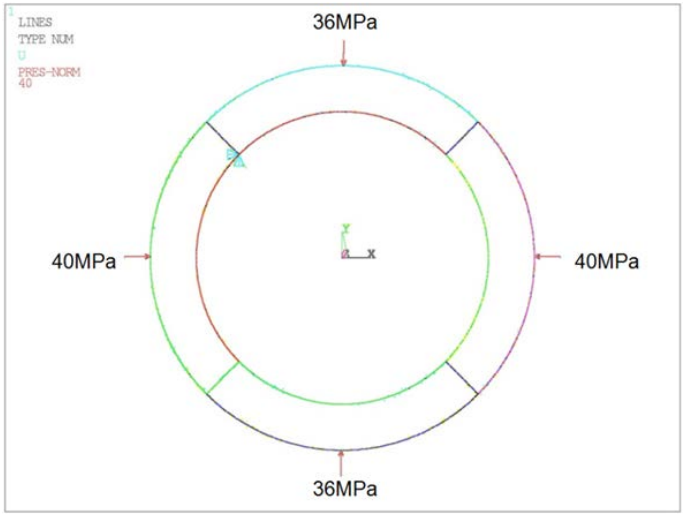

Fig. 2: Model of the asymmetric stress distribution on the tubing. [6]

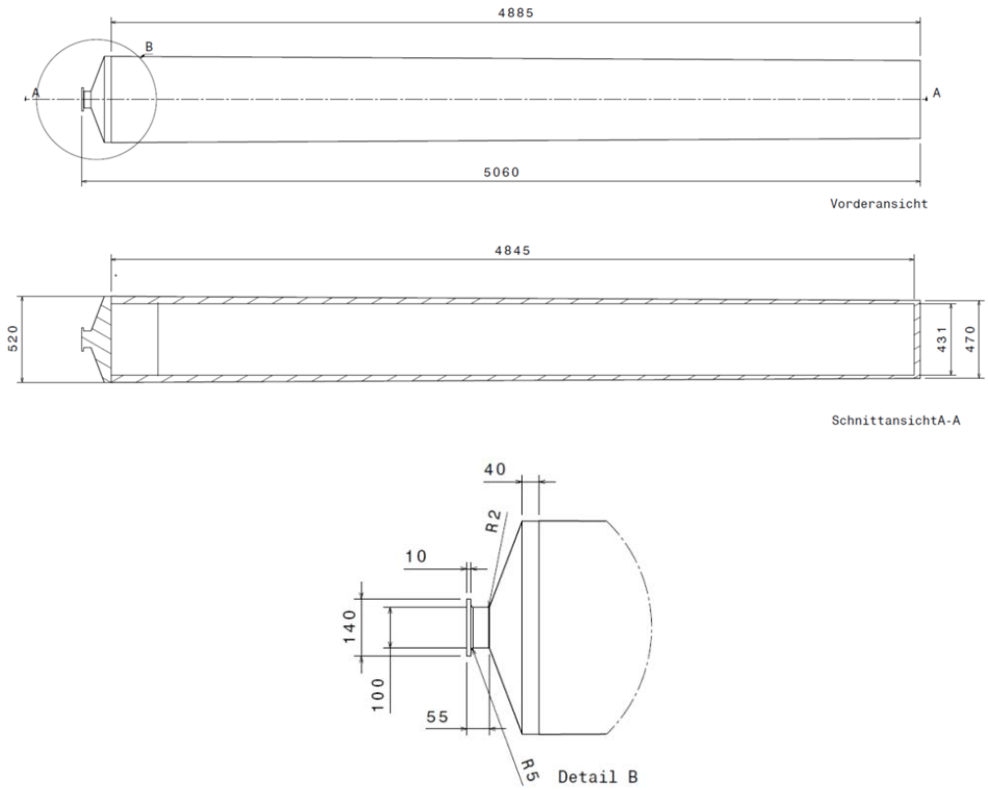

Fig. 2: BSK-R (retrievable canisters) [6]

Retrieval process

The conceptual approach for the retrieval process also includes an inversion of the storage process as far as possible. Construction of the drifts and the cross-cuts is performed using roadheader machines. After the position of a storage-borehole is localized, the drill cellar is bared and fitted and the tubing is opened. The borehole-seal is opened under radiation protection conditions and the backfill is removed in sections by a suction device. The mushroom-shaped load attachment of the coquille is cleaned by a manipulator (if necessary) and can be caught by a claw. If the BSK-R is stuck in the backfill, a vibrator can help to loosen it.

The BSK-R is now pulled through the retrieval device (=modified storage-device) inside the transfer-container. Further transport of the transfer-container can be accomplished by an automotive or rail-mounted transportation. After the last BSK-R was removed from the tubin, the tubed borehole is closed, all machinery is cleared and a trafficable floor is prepared. The backfill extracted from the tubing remains underground after free release.

SUMMARY AND CONCLUSIONS

In the VSG scheme was demonstrated, that the retrieval of waste-containers from drift-storage and borehole-storage is possible.

Future concepts must be prepared to answer the question how the retrieved containers will be interim-stored above surface and how they could be transferred to transport- and storage-containers meeting the requirements for interim storage. For this reason, a conditioning-facility to repack the wastes into transport- and storage-containers has to be installed and a sufficient number of these containers for conditioning have to be available in advance.

An over ground conditioning facility to examine the transportability and storability of the waste-containers and the option for repacking,

- storage capacities for the retrieved containers through use of the central and

decentralized interim storages and

- containers to enclose fuel rods/elements or coquilles from retrieved containers that are damaged

have to be provided.

REFERENCES

[1] Bundesministerium für Umwelt, Naturschutz und Reaktorsicherheit (BMU): Sicherheitsanforderungen an die Endlagerung wärmeentwickelnder radioaktiver Abfälle. Bonn, Stand: 30. September 2010.

[2] Engelmann, H.-J., Lommerzheim, A., Biurrun, E., Hubert, R., Pöhler, M.: Direkte Endlagerung ausgedienter Brennelemente DEAB (02E8371), Untersuchung zur Rückholbarkeit von eingelagertem Kernmaterial in der Nachbetriebsphase eines Endlagers. Deutsche Gesellschaft zum Bau und Betrieb von Endlagern für Abfallstoffe (DBE), 1995.

[3] Bollingerfehr, W.; Charlier, F. et. Al.: Technical Design and Optimization of a HLW-Repository in the Gorleben Salt Dome including Detailed Design of the Sealing System. WM2013 Conference, February 24 -28, 2013, Phoenix, Arizona, USA.

[4] Bergverordnung zum Schutz der Gesundheit gegen Klimaeinwirkungen (Klima-Bergverordnung - KlimaBergV), in der Fassung vom 9. Juni 1983 (BGBl. I S. 685).

[5] Voß, J.: Grubenklima: Grundlagen, Vorausberechnung, Wetterkühlung; Mit Arbeitsblättern und Berechnungsbeispielen für die bergbauliche Praxis. Vol. 27, Glückauf-Betriebsbücher, Verlag Glückauf GmbH: Essen, 1981.

[6] nse - international nuclear safety engineering GmbH, Konzept Rückholung zu Variante C. MEMO 20120113-nse zum Arbeitspaket 6, Vorläufige Sicherheitsanalyse für den Standort Gorleben, Januar 2012.