SHAFT OR BOREHOLE PLUG-ROCK MECHANICAL INTERACTION

Robert G. Jeffrey
Jaak J.K. Daemen

Department of Mining and Geological Engineering
University of Arizona, Tucson, Arizona 85721

ABSTRACT

Muskhelishvili's solution to the problem of a plate and a circular inclusion which are homogeneous, isotropic, and elastic is applied to study the stresses in and around a plug in a borehole or shaft. Plane stress and plane strain results are compared, as are the effects of plug-rock interface conditions assumed to be welded or frictionless. Results are presented for representative plug and rock material properties.

Matching plug material properties to the material properties of the surrounding rock results in the best stress conditions in the plug-rock system. The next most desirable combination of material properties is a plug that is stiffer and less compressible than the rock.

A viscoelastic solution for two-element Maxwell materials was obtained by application of the correspondence principle to the elastic solution.

Plug and rock materials that display continuous creep behavior must have closely matched viscous properties if the development of adverse stress conditions is to be avoided.

A hydrostatic applied stress field leads to reduced stress concentrations and makes material property matching less critical.

Because of inherent uncertainties associated with long-term prediction of stresses and rock and plug properties, it is recommended that shafts and boreholes be plugged with multisection seals, each section having different mechanical properties.

KEY WORDS: Borehole plugging, shaft plugging, rock mass sealing, plug-rock mechanical interaction, stress concentrations.

INTRODUCTION

Deep underground repositories for high level nuclear waste storage are likely to be sited in massive rock formations that have low permeabilities. Boreholes and shafts that penetrate the rock provide potential pathways for fluid migration both toward and away from the repository area. It is therefore important that these potential high permeability pathways through the natural rock barrier be sealed so that after plugging the rock mass still provides an effective barrier to fluid migration. The plugs must maintain chemical and mechanical integrity over the design life of the repository, which may be 10,000 years or more. This paper deals with some aspects of the mechanical interaction between the borehole or shaft plug and the surrounding rock.

PLUG-ROCK INTERACTION

The excavation of an opening such as a borehole or shaft causes the rock around the opening to deform. A redistribution of the stresses around the opening takes place. Small openings in uniform massive rock are more likely to result in elastic deformation than large openings or openings in jointed and fractured rock. Even the elastic part of the deformation is progressive in that as the face of excavation advances, the elastic deformation in the opening at a fixed point behind the face increases. Once the face of excavation has advanced more than about two diameters beyond a point, virtually all the elastic deformation and elastic stress redistribution has occurred. Time-dependent nonelastic deformations contribute to the total deformation and may range in magnitude from insignificant to many times the elastic deformations, depending on the rock characteristics and when and to what extent support is placed in the opening.

Both the elastic analysis and the viscoelastic analysis presented in this paper assume that the external load is applied after the plug is placed. Thus the deformation of the opening that occurs before plugging is not taken into account. The elastic deformation and stresses in the rock are therefore underestimated and the deformation and load on the plug may be overestimated. However, nonelastic deformation may continue to load an actual plug, leading to the development of high plug stresses.

Changes in the stress field after a borehole is plugged will result in mechanical interactions between the plug and the surrounding rock. The nature of the interactions will depend on the mechanical properties of the plug and rock materials. If the rock is assumed to behave in a linear elastic manner, superposition of different stress states is possible. The stresses around a hole in a plate (Fig. 1) under the original stress field can be superimposed on the interaction stress state around a plugged hole that arises from a change in the original stress state to form the final stressed condition of the plug-rock system.

PLANE STRESS-PLANE STRAIN

An in-plane solution for stresses and displacements around a circular inclusion in a plate for homogeneous isotropic elastic materials is given by Muskhelishvili.[1] The assumption of plane stress or plane strain can be used to obtain an analytical solution for the problem of determining stresses and displacements in and around a plugged borehole. Plane stress exists when all nonzero stress components act in and are parallel to one plane. This state of stress is closely approached in a thin disk loaded in the plane of the disk. These conditions are also approached in and around a plugged borehole or shaft at shallow depth. Plane strain is said to exist when all nonzero strain components are in and parallel to one plane. This state of strain will exist, for example, in a long cylinder that is loaded by forces that do not vary along the axis of the cylinder and that act perpendicular to the axis. Similar conditions exist at a deep cross section through a plugged borehole or shaft (Fig. 2).

The equations given by Muskhelishvili were used to write a computer program in order to facilitate the calculation of stresses and displacements for the plugged hole problems. Results from this program have been verified using published results by other authors.[2,3]

WELDED VERSUS FRICTIONLESS INTERFACE

Muskhelishvili's equations give stresses and displacements for either a welded or a frictionless plug-rock interface condition. The welded interface requires the plug to be intimately bonded to the rock. This ensures continuity of radial and shear stresses as well as of radial and tangential displacements across the interface. Continuity of tangential displacements, which is required for a welded interface condition, does not imply continuity of tangential stresses across the interface since the tangential

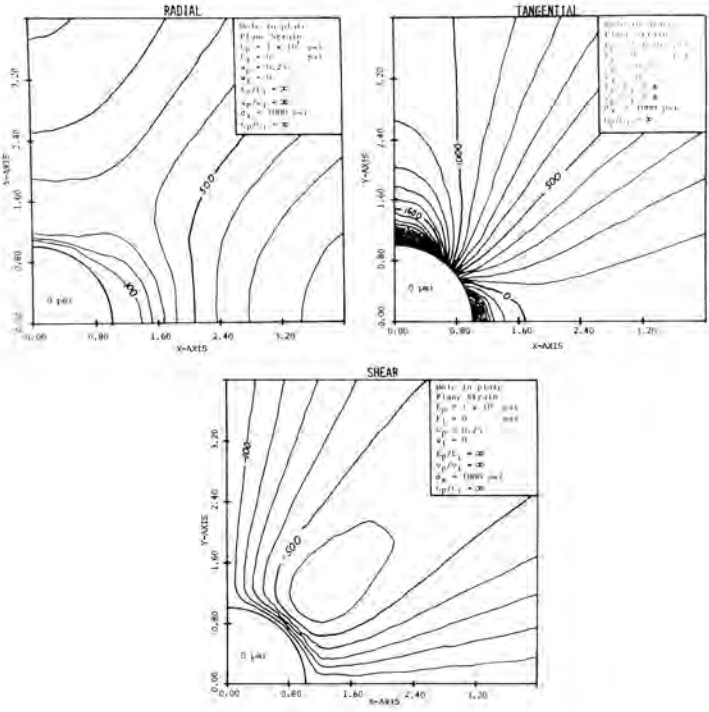

Figure 1. Elastic radial, tangential, and shear stress contours around a hole in a plate. The applied stress is uniaxial with σ_x = 1000 psi, ν_p = 0.25, E_p = 1 x 10^6 psi, plane strain, contour interval = 100 psi.

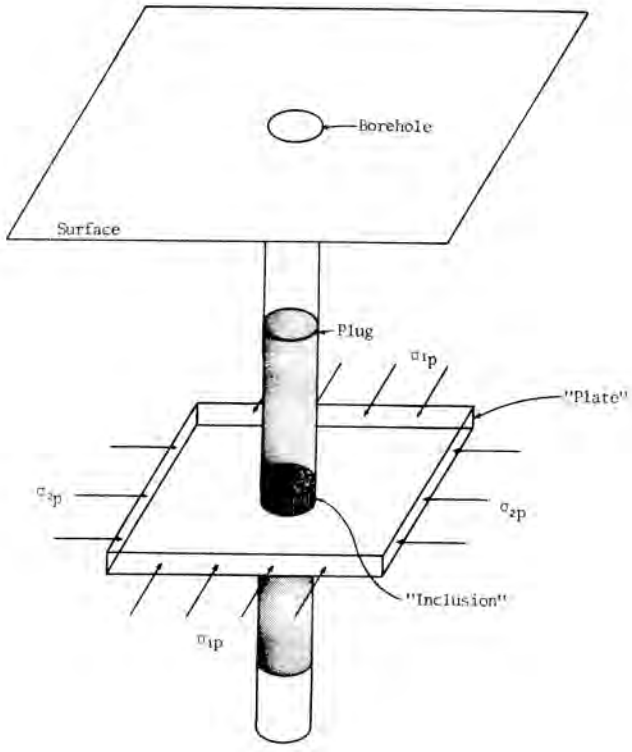

Figure 2. The plane stress-plane strain plug-rock interaction model of a section through a plugged borehole.

stress is a function of the derivative of the displacement. Tangential stresses are in fact not continuous across the interface except when no inclusion exists and the plate is uniform. A frictionless interface means that radial stresses and displacements are continuous and that the shear stresses are zero on the interface. The frictionless interface condition does not allow for the formation of separations or gaps at the interface though it does allow for discontinuous tangential displacements there. The frictionless interface analysis is useful as an estimate of the stresses occurring in and around a debonded or nonbonded borehole plug.

Contours of radial, tangential, and shear stresses are shown in Fig. 3 for a welded interface condition and identical plug and rock material properties. The welded interface condition thus yields the stress state of a uniform plate subject to plane strain in a uniaxial stress field. The state of stress is the same at all points in the plate with σ_x = 1000 psi and σ_y = 0 psi.

The stress state shown in Fig. 4 results from changing the interface condition to frictionless while maintaining all other boundary conditions and material properties identical to those that were used to produce the stress state shown in Fig. 3. This change of interface conditions leads to the development of a more severe stress condition in the rock and plug materials. Tensile stresses that develop near and on the interface in the radial and tangential directions might cause fractures to open in the plug and surrounding rock, increasing the permeability of the plug-rock system.

From these results and others presented in more detail elsewhere,[4] a change from a welded inclusion-plate interface condition to a frictionless interface condition is seen to have two effects. First, the stresses in the plate and inclusion materials become more severe; second, the stresses in the inclusion change from homogeneous with constant principal stress orientation and magnitude throughout to a more complex nonhomogeneous state.

Regions of tensile (negative) stress are of critical importance in assessing potential failure of a plugged borehole-rock system. Rock and many plug materials are weaker in tension than in compression by a factor of from 10 to 15.[5] The interface between the plug and the rock is likely to be even weaker in tension than the plug or rock depending on the type of bond formed. Dilation of unbonded preexisting fractures will occur if the fractures are oriented so that the normal stress across them is tensile.

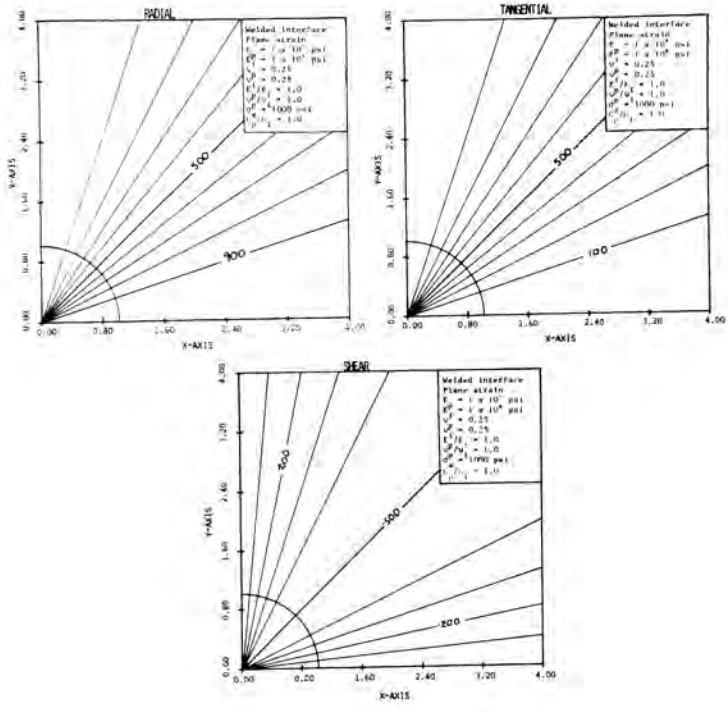

Figure 3. Elastic radial, tangential, and shear stress contours in a uniform plate with a welded plug-rock interface condition. The applied stress is uniaxial with σ_x = 1000 psi, $\nu_p = \nu_i = 0.25$, $E_p = E_i = 1 \times 10^6$ psi, plane strain, contour interval = 100 psi.

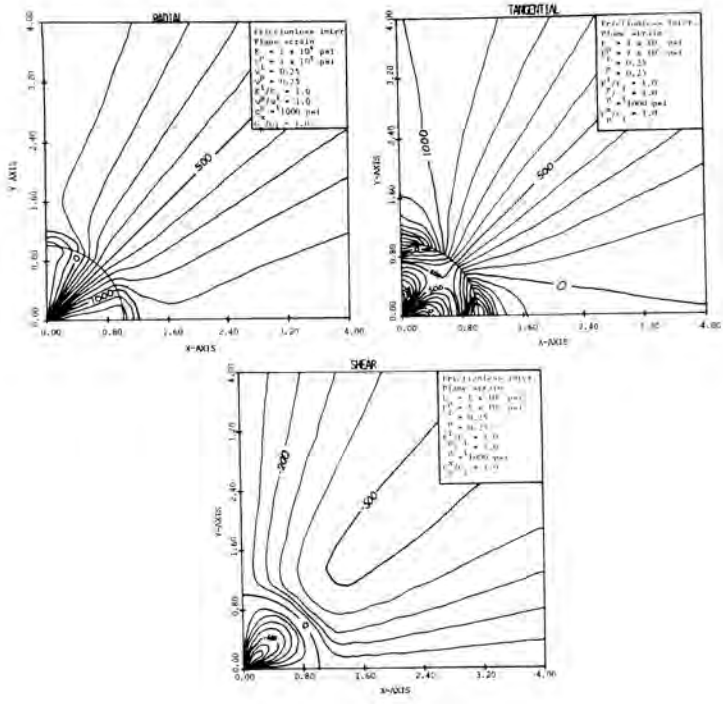

Figure 4. Elastic radial, tangential, and shear stress contours in a uniform plate with a frictionless plug-rock interface condition. The applied stress is uniaxial with σ_x = 1000 psi, $\nu_p = \nu_i = 0.25$, $E_p = E_i = 1 \times 10^6$ psi, plane strain, contour interval = 100 psi.

Mohr stress circles can be constructed from the radial, tangential, and shear stresses taken from the program output or from the contour plots for any point in and around the plug. Fractures with critical orientations such that tensile normal stress exists across them may open, and this will result in an increase in the permeability of the system, constituting at least a partial failure of the plug-rock seal system.

ELASTIC SENSITIVITY ANALYSIS

Muskhelishvili's equations contain elastic constants written in terms of the shear modulus and Poisson's ratio of the inclusion, G_i and ν_i, and of the plate materials, G_p and ν_p. Analysis of the sensitivity of the equations to variations in both the Poisson's ratio and shear modulus of the materials was performed by fixing the values of ν_p and ν_i and varying the G_p/G_i ratio over a range from 1/100 to 100. This was repeated for values of ν_p and ν_i ranging from 0.01 to 0.499. This analysis revealed that a welded interface in which plug and rock material properties matched yields the most favorable stress state. This is a difficult requirement to meet, though it may be approached with a melted salt plug in rock salt. As G_p/G_i becomes greater than 1, the stress concentrations rapidly become unfavorable, with high compressive and tensile stresses occurring near the plug-rock interface for all values of Poisson's ratio tested. The stress concentrations are less severe near the interface for all ν values when G_p/G_i is less than 1. The most severe tensile stress concentrations can be eliminated by choosing ν_i greater than ν_p. Therefore, if exact matching of plug and rock material properties is not attempted, the plug should be slightly stiffer ($G_i > G_p$) and less compressible ($\nu_i > \nu_p$) than the rock material in order to minimize tensile and compressive stress concentrations near the plug-rock interface.

VISCOELASTIC ANALYSIS

Many rocks show time-dependent deformation, or creep, when they are loaded for long time periods. A viscoelastic analysis was used to study some of the time-dependent behavior neglected in the elastic analysis.

Correspondence Principle

The correspondence principle allows linear viscoelastic solutions to be obtained from elastic solutions for certain problems. The viscoelastic solution is obtained by first

substituting the Laplace transform of viscoelastic time-dependent operators for the loading function and elastic constants into the elastic equations; the viscoelastic solution is then found by taking the inverse Laplace transform of this expression.[6]

Muskhelishvili's elastic solution has been transformed, according to the correspondence principle, to obtain a visco-elastic solution for the problem of a circular inclusion in a plate for homogeneous, isotropic, and linear viscoelastic incompressible ($\nu = 0.5$) Maxwell materials. Only the plane-strain, welded interface forms of the elastic equations were transformed by this method.

Viscoelastic Sensitivity Analysis

The viscoelastic equations used for this analysis contain terms involving the shear moduli, G_i and G_p, and the viscosities, η_i and η_p, of the inclusion and plate materials. Several features of the plug-rock system behavior can be derived from an examination of the equations. At time $t = 0$ the elastic solution is obtained, because the rock and plug are modeled as Maxwell materials. As the time since loading approaches infinity, the stress equations become independent of the elastic constants and depend only on the geometry and viscosity of the plug and rock materials. If $\eta_i = \eta_p$, the stresses will approach those in a uniform plate without inclusion after a sufficiently long time has passed, regardless of the values of the elastic constants.

The short-term behavior of the plug-rock system is controlled by the elastic properties of the materials and the long-term behavior is controlled by the viscous properties of the plug and rock materials. The final stress state in plug and rock for materials that show continuous creep and can therefore be modeled by Maxwell materials will depend on the viscosities of the materials. It is therefore important to match the plug viscosity as closely as possible to the rock viscosity. The stress state that develops over time will then eventually approach that of a uniform plate. Any difference in viscosity between the plug and the rock will lead to a more severe limiting stress state. Figures 5 and 6 show the two opposite cases that can arise. The stress state shown in Fig. 5 is for η_i much less than η_p; the plug stresses have become nearly hydrostatic, while the surrounding rock stresses are high since the plug is not providing much support. The stress state that can occur when η_p is much less than η_i is shown in Fig. 6. This combination of viscosities will

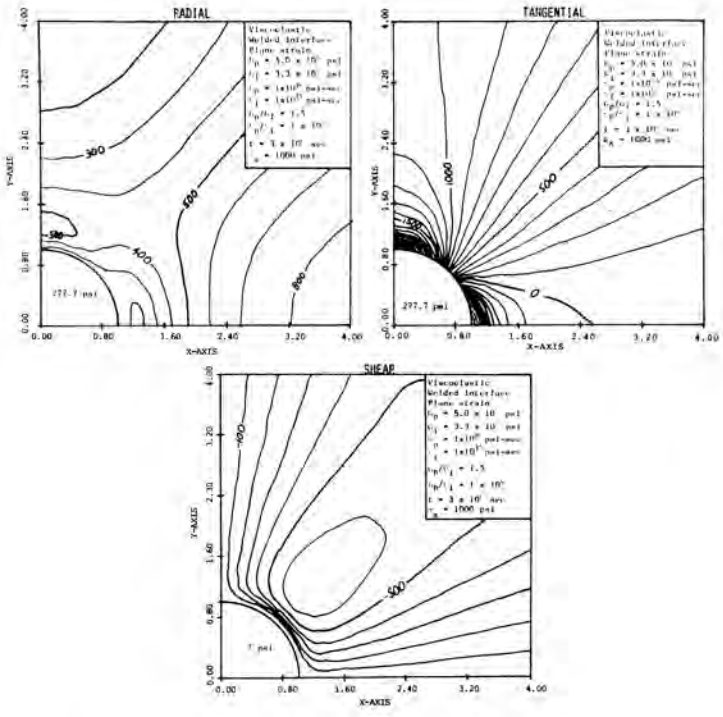

Figure 5. Viscoelastic radial, tangential, and shear stress contours for η_j much less than η_p. The applied stress is uniaxial with σ_x = 1000 psi. Incompressible Maxwell materials, $\eta_j = 1 \times 10^{10}$ psi-sec, $\eta_p = 1 \times 10^{14}$ psi-sec, $G_j = 3.3 \times 10^5$ psi, $G_p = 5.0 \times 10^5$ psi, $t = 3 \times 10^6$ sec, plane strain, welded, contour interval = 100 psi.

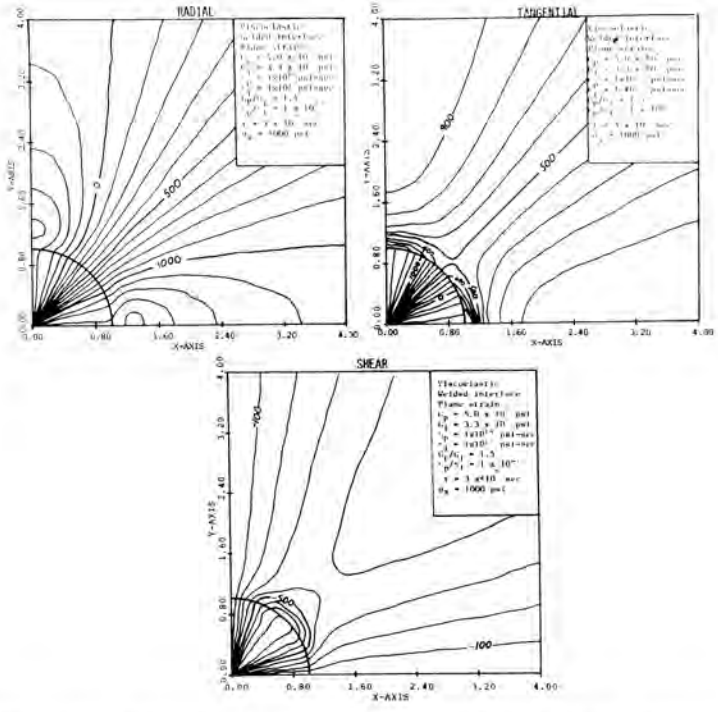

Figure 6. Viscoelastic radial, tangential, and shear stress contours for η_p much less than η_i. The applied stress is uniaxial with σ_x = 1000 psi. Incompressible Maxwell materials, $\eta_i = 1 \times 10^{17}$ psi-sec, $\eta_p = 1 \times 10^{14}$ psi-sec, $G_i = 3.3 \times 10^5$ psi, $G_p = 5.0 \times 10^5$ psi, $t = 3 \times 10^8$ sec, plane strain, welded, contour interval = 100 psi.

lead to higher stresses in the plug because it takes more load than before. Had the viscosities been more nearly equal, the stresses would have been less severe in both cases.

STRESS FIELD EFFECTS

The uniaxial applied stress field used in all the above analyses is the worst loading case for the plug-rock system. As a second stress, σ_y, is applied, the stress concentrations are reduced. In an in-plane hydrostatic (or pure hydrostatic) applied stress field, the stress concentrations are always less than two times the applied stress, and no tensile stress exists anywhere. In addition, $\tau_{r\theta}$ is zero everywhere.

FURTHER RESEARCH NEEDS

The elastic analysis should be extended by the finite element method or other numerical methods to include a three-dimensional analysis. The effect and importance of shear and normal stresses directed along the plug axis can then be assessed. A two- or three-dimensional numerical analysis that models a plug-rock interface with contact over only a portion of the interface, i.e., with gap formation, would be useful in studying failure propagation and its extent along the interface.

The viscoelastic analysis can be extended by adopting a more complex material model, such as a Burgers model, so that transient creep phenomena are included in the analysis.

Lab and Field Verification

The results presented in this paper will be compared with results of laboratory and field testing. The laboratory experiments will involve triaxial and polyaxial stress conditions applied to 4- and 6-inch diameter samples containing 1-inch diameter plugged holes. The permeability of the plug-rock system *will be tested* by pumping water axially down the hole. Interface separations and fractures will be detected by using fluorescent dyes in the water and sectioning the rock laterally across the plug after the permeability experiments are completed.[7] Field borehole plugging experiments will be conducted in 1½-inch and 6-inch diameter holes.

CONCLUSIONS AND RECOMMENDATIONS

1. A uniform plate having plug material properties matched to rock material properties is the best plug choice to minimize stress concentrations. This condition may be difficult to achieve because of the intrinsic variability of rock.

2. If a uniform plate condition cannot be met, the plug should be less compressible ($\nu_i > \nu_p$) and stiffer ($G_i > G_p$) than the plate.

3. A welded interface condition not only ensures a less permeable boundary between the plug and rock but also reduces adverse stress concentrations in the plug and rock. Such stress concentrations diminish the effectiveness of the plug-rock seal system.

4. A hydrostatic or near hydrostatic stress field is highly desirable, since the interaction stress concentrations become much less severe in this applied field stress for all plug-rock material combinations.

5. The openings should be kept as small as possible. The volume of rock and plug material subject to adverse stress concentrations is proportional to the square of the hole diameter. Thus a larger hole will increase the likelihood of developing a higher permeability along the plug-rock system compared with a hole of smaller diameter.

6. Because of the inherent uncertainty in predicting long-term stress changes and in determining long-term rock and plug properties, shafts and boreholes should be plugged with multi-section seals.[8] Each section of plug can then be designed for a specific purpose, e.g., to minimize rock or plug stress concentrations. A stiff, strong, nonbonded plug will provide support to the surrounding rock while a soft deformable plug will tend to provide less support but will remain intimately in contact with the surrounding rock.

ACKNOWLEDGEMENT

This work is part of an ongoing research program, "Rock Mass Sealing," sponsored by the Waste Management Research Program, Office of Nuclear Regulatory research, U.S. Nuclear Regulatory Commission.

REFERENCES

1. Muskhelishvili, N.I., 1953, Some Basic Problems of the Mathematical Theory of Elasticity, "Stretching of Plates with Inserted or Attached Elastic Discs," P. Noordhoff, Ltd., Groningen, Holland, pp. 215-217.

2. Babcock, C. O., 1974, "A New Method of Analysis to Obtain Exact Solutions for Stresses and Strains in Circular Inclusions," U.S. Bureau of Mines, R.I. 7967.

3. Coutinho, A., 1949, "Theory of an Experimental Method for Determining Stresses, Not Requiring an Accurate Knowledge of the Modulus of Elasticity," International Association for Bridges and Structural Engineering, Vol. 19, pp. 83-94.

4. Jeffrey, R. G., 1981, "Shaft or Borehole Plug-Rock Mechanical Interaction," M.S. thesis, Dept. of Mining and Geological Engineering, University of Arizona, Tucson, Arizona, and Topical Report to U.S. Nuclear Regulatory Commission, SAFER Division, Office of Nuclear Regulatory Research.

5. Jaeger, J.C., and N.G.W. Cook, 1976, Fundamentals of Rock Mechanics, John Wiley and Sons, 2nd edition.

6. Gnirk, P. F., and R. E. Johnson, 1964, "The Deformational Behavior of a Circular Mine Shaft Situated in a Viscoelastic Medium under Hydrostatic Stress," in Proceedings Sixth Symposium on Rock Mechanics, University of Missouri at Rolla, October, 1964, pp. 231-259.

7. South, D. L., S. L. Cobb, and J.J.K. Daemen, 1981, "Borehole Plug Performance," in Proceedings of the Symposium on Waste Management, Tucson, Arizona, Febuary 1981.

8. Office of Nuclear Waste Isolation, 1980, "Repository Sealing Design Approach--1979," Report No. ONWI-55, *prepared by* D'Appolonia Consulting Engineers, Inc., Department of Energy Contract No. DE-AC06-76RL01830-ONWI, for Battelle Memorial Institute, Project Management Division, Columbus, Ohio.